REVISIONS				
No.	ZONE	ECN	CHANGE	DATE
1				

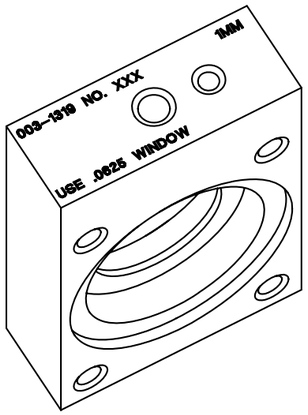

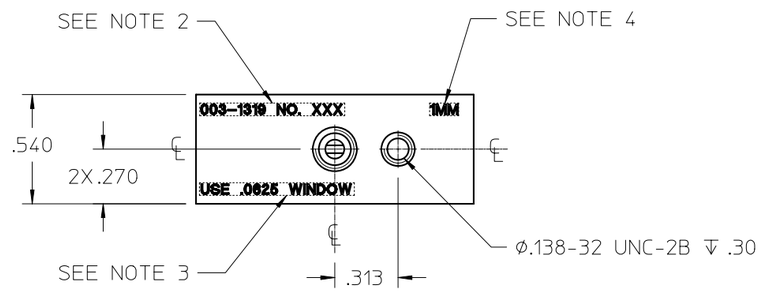

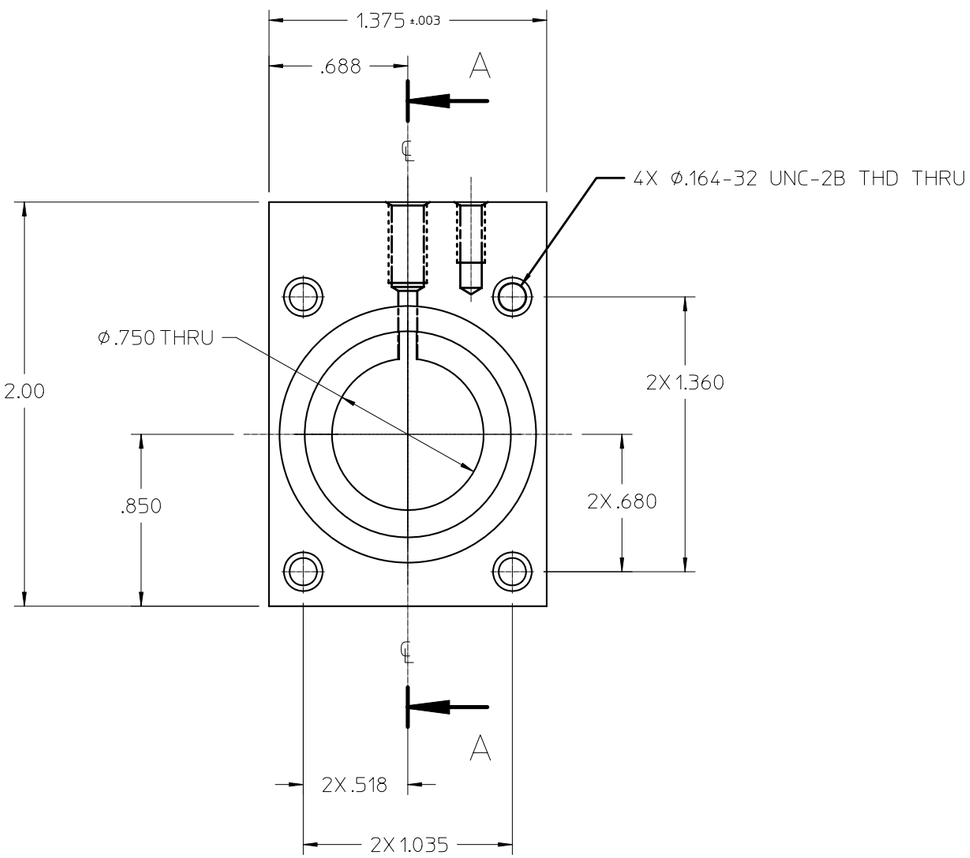

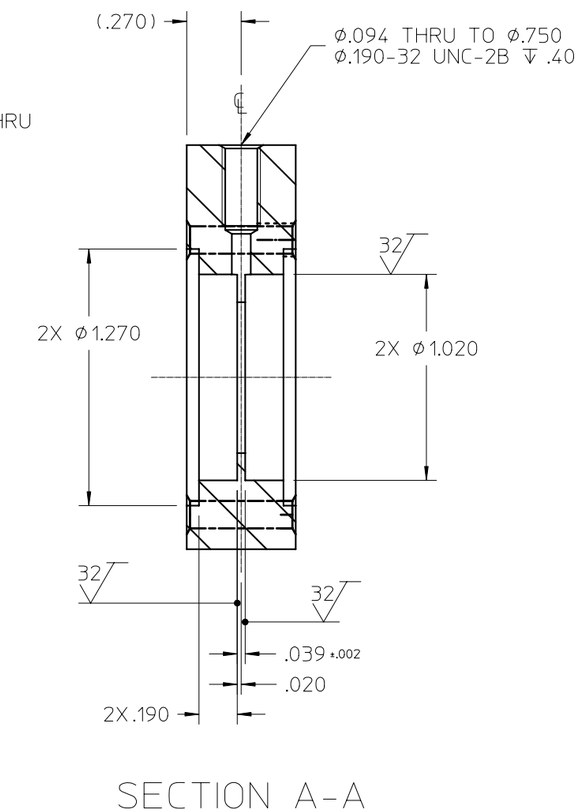

NOTES:
1. BREAK ALL SHARP EDGS .005 TO .015
2. STEEL STAMP, SCRIBE, OR ETCH "003-1319 NO." FOLLOWED BY A SEQUENTIAL NUMBER ON EACH BODY USING INCREMENTS OF 1 STARTING WITH THE NUMBER "N". (REFERENCE ORDER FOR VALUE OF "N") AND ENDING WITH ["N" + QUANTITY ORDERED -1]
   ie: (FOR "N"=1) NO. 1, NO. 2, NO. 3 ... USING .12 HIGH CHARACTERS LOCATED APPROX WHERE SHOWN.
3. STEEL STAMP, SCRIBE, OR ETCH "USE .0625 WINDOW" USING .12 HIGH CHARACTERS LOCATED APPROX WHERE SHOWN.
4. STEEL STAMP, SCRIBE, OR ETCH "1 MM" USING .12 HIGH CHARACTERS LOCATED APPROX WHERE SHOWN.
5. USE WITH RETIANING PLATE 003-1320 AND O-RING AS568A DASH NUMBER 117.

MATERIAL SPECIFICATION	APPROVALS		
MATERIAL: TITANIUM, GRADE 2, R50400	ENGR	DATE	UNLESS OTHERWISE SPECIFIED DIMENSIONS ARE IN INCHES TOLERANCES ARE : DECIMALS .XXX ±.005 .XX ±.01 FRACTIONS ±.015 ANGLES ±.5
FORM: BAR / SIZE	ENGR MNGR	DATE	DO NOT SCALE DRAWING
MODEL DATA	DRAWING DATA		THIRD ANGLE PROJECTION
MODEL NAME: cg_1mmcell_body_nu	STATE: work	DATE: 1/26/05 1:36 PM	
CREATOR: allen / DATE: 1/14/05 10:35 AM	VERSION: 1	SHEETS: 1	
	DRAFTER: allen	DATE: 1/26/05 1:36 PM	ENGINEER: allen
	LAST UPDATE BY: allen	DATE: 2/7/06 1:58 PM	PHONE #

NIST National Institute of Standards and Technology
Technology Administration, U.S. Department of Commerce

CENTER FOR NEUTRON RESEARCH
100 BUREAU DRIVE
GAITHERSBURG, MD. 20899

FOR: 1mm CELL BODY

SIZE: C | DWG No. 003-1319 | REV 1

SCALE 2:1 | RELEASE DATE | SHEET 1 of 1

DALO. WT. | ACT. WT. | DIM. & TOL. PER ANSI Y14.5M-1982

mm_cells